MAIN FEATURES

Powered by
MOTEURS Baudouin

Standby Power Rating
88 kVA, 70 kW, 50 Hz

Prime Power Rating
80 kVA, 64 kW, 50 Hz

Service		Standby[1]	Prime[2]
Speed	(rpm)	1500	
Voltage	(V)	400/231	
Current	(A)	127	115
Power Factor	(CosØ)	0.80	

Industrial Water Cooled

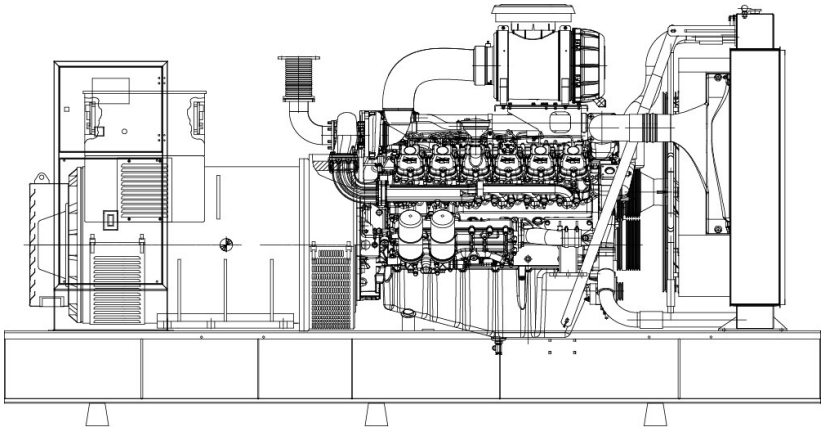

Image used for illustration purposes only

CODES AND STANDARDS

ISO 9001:2015
ISO 10002:2018
ISO 14001:2015
ISO 45001:2018

EN ISO 8528-13:2016
EN ISO 8528-4
EN ISO 8528-5
EN ISO 8528-8
EN ISO 12100:2010
EN ISO 13857:2019
EN 60204-1:2018
EN 60034-1:2010/AC:2010
EN 61439-1:2011
EN 61439-2:2011
EN 61000-6-2:2019
EN 61000-6-4:2007/A1:2011

TS 12650
TS ISO 8528-4
TS ISO 8528-5
TS EN ISO 8528-13

TS EN ISO 9227
TS EN ISO 2178
TS EN ISO 2409

EN 60204-1:2015
EN 61000-6-2:2015
EN 61000-6-4:2016
EN ISO 8528-13:2016

GOST-R 51769:2001
GOST-R ISO 13849-1:2003
GOST-R 54145-2010
GOST-R IEC 62198:2015
GOST-R 51901-1:2002
GOST-R 15150-69
GOST-R 51338-99
GOST-R 2787-75
GOST-R 24297:2013
GOST-R 33855:2016

Not all codes and standards apply to all configurations.
Contact factory for details.

STANDBY POWER [1]

According to ISO 8528-1:2018, emergency standby power is the maximum power available during a variable electrical power sequence, under the stated operating conditions, for which a generating set is capable of delivering in the event of a utility power outage or under test conditions for up to 200 h of operation per year with the maintenance intervals and procedures being carried out as prescribed by the manufacturers. The permissible average power output over 24 h of operation shall not exceed 70% of the ESP. There isn't any overload capability above stand by power rate.

PRIME POWER [2]

According to ISO 8528-1:2018, prime power is the maximum power which a generating set is capable of delivering continuously whilst supplying a variable electrical load when operated for an unlimited number of hours per year under the agreed operating conditions with the maintenance intervals and procedures being carried out as prescribed by the manufacturer. The permissible average power output over 24 h of operation shall not exceed 70% of the PRP. 10% overload permissible for 1 hour in every 12 hours.

STANDARD REFERENCE CONDITIONS

Output ratings are presented at 25°C air inlet temperature, barometric pressure 100 kPa, relative humidity 30%. This generating set is designed to operate at high ambient temperatures (up to 50°C), humidity (up to 70%) and higher altitudes. In case of specific site conditions, genset output power may derate. For such conditions please consult your dealer to choose correct product. Some of the specifications are not standard on all genset models

Electrogen GmbH is constantly developing its products and reserves the right to make changes to product configurations without prior notice.

STANDARD FEATURES

ENGINE
State of the art technology, water cooled, four stroke heavy duty high performace industrial type diesel engine.

COOLING SYSTEM
Made of quality industrial type radiator, expansion tank and cooling fan keeps the engine system at the appropriate temperature of the generator equipment. Radiator and cooling fan, complete with safety guards, designed to cool the engine at high ambient temperatures.

ELECTRICAL SYSTEM
Battery group (12V or 24V), redresser, battery tray and cables are provided with genset. The charging alternator is mounted on the engine and is driven by a belt-pulley. DC starting motor to crank the engine is available mounted on the engine.

FUEL SYSTEM
On Generating Sets up to 1250 kVA, the base-frame design is incorporated with an integral fuel tank with a capacity of approx. 8 hours running at full load. The tank is supplied complete with fill cap breather, fuel level gage, fuel feed and return lines to the engine and drain plug. Higher capacities and double-walled fuel tanks are also available as an option.

LUBRICATION SYSTEM
Our diesel generators feature an efficient oil pump and integrated filtration system, ensuring optimal lubrication and removal of impurities from the engine oil. Equipped with low oil pressure sensors, they automatically trigger an emergency shutdown to protect the engine in critical situations. This advanced oil management system reduces friction among moving parts, extending the engine's lifespan and ensuring reliable performance. With these features, our generators offer superior protection and efficiency, making them an excellent choice for your power needs.

EXHAUST SILENCER
Heavy duty steel industrial type exhaust silencer. Silencer noise reduction level is 10-15 dB(A). Higher capacity silencers also available as residential, critical or hospital types as option.

CUSTOMIZED SOLUTIONS
KJ Power customized power systems, as tailor made production built and tested by a dedicated team of experienced engineers and technicians, which means it can meet the most demanding specifications. When you combine our industry experience with our agile manufacturing process, you get reliable, purpose-built solutions.

SOUND ATTENUATED CANOPIES
Sound insulated canopies are produced from galvanized sheets in accordance with rust and harsh weather conditions, as modular design canopies are cleaned with a special process and painted with electrostatic powder paint. KJ Power canopies have a modular structure that can be easily disassembled, providing the group with easy service and maintenance and on-site parts replacement. At the same time, the canopies are designed to take into account the cooling performance and power output value of the generator set according to the ambient temperature, and are designed to not cause any power drop during operation. Canopies are produced after prototype tests are carried out for suitability to ambient temperature and sound level.

Container type and super silent canopies are also offered optionally according to customer demand.

ALTERNATOR
Synchronous 4 Poles, 3 phase, self excited, brushless alternators are designed to offer you the best power generation performances. The insulation system is Class H. All windings are impregnated in either a triple dip thermosetting liquid, oil and acid resisting polyester varnish or vacuum pressure impregnated with a special polyester resin. Heavy coating of antitracking varnish provides additional protection against moisture or condensation. The fully sealed Automatic Voltage Regulator (AVR) maintains voltage regulation up to ± 1% nominal adjustment by means of a trim pot incorporated on AVR. When the PMG or AREP option is installed, an overload capacity equivalent to 300% of the full load impedance can be sustained for 10 seconds at Power Factor " CosØ = 1 ".

FACTORY ACCEPTANCE TESTS
All generator sets manufactured at KJ Power facilities are subjected to load testing before being shipped. Control functions of all protective devices and field load conditions are implemented by simulation.

DOCUMENTATION
Maintenance and user manuals related with engine, generator and controller. Wiring diagram/Electric schematic.

WARRANTY
All our generator sets are covered by a warranty against manufacturing defects in materials and workmanship. The warranty conditions, which also cover the equipment on the generator, vary according to the local conditions of the country where the product is operated.

Electrogen GmbH is constantly developing its products and reserves the right to make changes to product configurations without prior notice.

STANDARD FEATURES

DATAKOM (STANDARD)

DEEPSEA

COMAP

DEIF

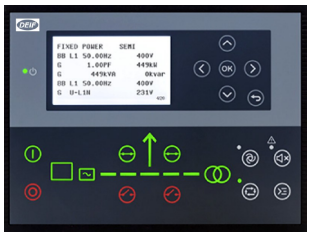

ADVANCED GENSET CONTROLLERS

The Genset Control Unit is an Auto Start Control Module for single genset applications. It includes a backlight LCD display which clearly shows the status of the engine all the times. This module can either be programmed using the front panel or by using the AMF configuration suite PC software.

Datakom D-500 MK3 controller is suitable to convert synchronization controller with plugin module.

METERING & ALARM INDICATORS

- Generator volts (L-L, L-N)
- Generator frequency
- Underspeed, Overspeed
- Generator current
- Engine oil pressure
- Engine coolant temperature
- Fuel level (Warning or shutdown)
- Hours run counter
- Battery voltage
- Fail to start/stop
- Emergency stop
- Failed to reach loading voltage / frequency
- Charge fail
- Loss of magnetic pick-up signal

COMMUNICATIONS

- Modbus RS-485, Modbus TCP/IP (optional)
- Ethernet , GSM-GPRS (optional)
- Internal GPRS modem (optional)
- Embedded web server (optional)
- Web monitoring, Web programming (optional)
- GSM-SMS (optional)
- Email (optional)
- SNMP (optional)
- USB host (optional)
- USB device
- RS-485 (optional)
- RS-232 (optional)
- Micro SD card slot (optional)
- J1939-CANBUS

CONTROLLERS FUNCTION

- AMF function
- Contactor/CB control outputs for ATS load transfer
- Remote start
- Manual start
- Engine controller
- Remote display & control unit (optional)
- Waveform display of V & I
- Harmonic analysis of V & I
- Current transformers at genset or load side

KJ Power uses state of the art technology genset control units like Datakom, Deepsea, Comap and Deif combining multi-functionality and wide communication possibilities together with a reliable design. These units comply and mostly exceed world's tightest safety, EMC, vibration and environmental standards for the industrial category. Software features are complete with easy firmware upgrade process through USB port. The Windows based PC software allows monitoring and programming through USB, RS-485, Ethernet and GPRS. The PC based Scada softwares allows monitoring and control of an unlimited number of gensets from a single central location.

Electrogen GmbH is constantly developing its products and reserves the right to make changes to product configurations without prior notice.

STANDARD FEATURES

- Antivibration Pads
- Air, Oil and Fuel Filters
- Radiator Mounted on the Genset
- Battery Group and Cables
- Battery Charger
- Engine Jacket Water Heater
- Charge Alternator
- Starter Motor
- Datakom D-500 MK3 Control Module
- Emergency Stop Button
- Integrated Fuel Tank up to 1250 kVA
- Industrial Type Exhaust Silencer
- Oil and Coolant
- User & Maintenance Manual

OPTIONAL FEATURES

- 3P or 4P Alternator Protection Circuit Breaker
- 3P or 4P Automatic Transfer Panel
- Fuel-Water Separator
- Oil Heater
- Alternator Winding Heater
- Alternator Temperature Sensors (RTD's)
- Charging Current Ammeter
- Battery Circuit Breaker
- PMG Excitation System
- Control Panel with Analog Gauges
- Set Mounted or Separately Designed Synchronization Systems
- External Fuel Tanks
- Underbase or External Type Double-Walled Fuel Tank
- Automatic Fuel Transfer Pump
- Electrical or Manual Oil Drainage Pump
- Electrical or Manual Air Intake and Exhaust Louvers
- Air Intake Heater
- Remote Cooling System
- Different Voltage and/or Frequency Options
- Modular Type Sound Attenuated Canopy
- Container Type Sound Attenuated Canopy

Electrogen GmbH is constantly developing its products and reserves the right to make changes to product configurations without prior notice.

ENGINE SPECIFICATIONS

Model			4M10G4D0/S
Speed		(rpm)	1500
Prime Power, net		(kWm)	69
Standby Power, net		(kWm)	77
Cycle			Diesel, 4 Stroke
Emission Standard			Non-Emission / Fuel Optimized
Injection System			Direct
Governor			Electronic
Intake Air Aspiration & Configuration			Turbocharged
Number Of Cylinder			4 - In-line
Bore x Stroke		(mm)	105 x 118
Displacement		(l)	4,087
Fuel Consumption	@ 100% Load	(l/h)	18,8
	@ 75% Load	(l/h)	13,5
	@ 50% Load	(l/h)	9,1
Starting System		(VDC)	12
Cooling System			Water Cooled
Coolant Capacity		(l)	17,9
Lube Oil Capacity		(l)	16,0

GENSET CONTROLLER

Controller		Datakom
Model		D-500 MK3

ALTERNATOR SPECIFICATIONS

Prime Power	(kVA)	80
Standby Power	(kVA)	88
Poles		4
Number Of Phase		3
Number Of Bearing		Single
Insulation Class		H
Number Of Wires		12/6
Winding Pitch		2/3
Protection Class		IP23
Cooling		Self Ventilating
Voltage Regulator		Electronic AVR
Steady State Voltage Regulation	(%)	±1
THD (No Load)	(%)	< 2
THD (Linear Load)	(%)	< 5
Excitation		Self Excitation

KJ POWER ALTERNATOR Nidec LEROY-SOMER STAMFORD | AvK ™

Electrogen GmbH is constantly developing its products and reserves the right to make changes to product configurations without prior notice.

CANOPY TYPE DIMENSIONS

Weight	(kg)	1395

(*) The unit of dimensions is "mm".

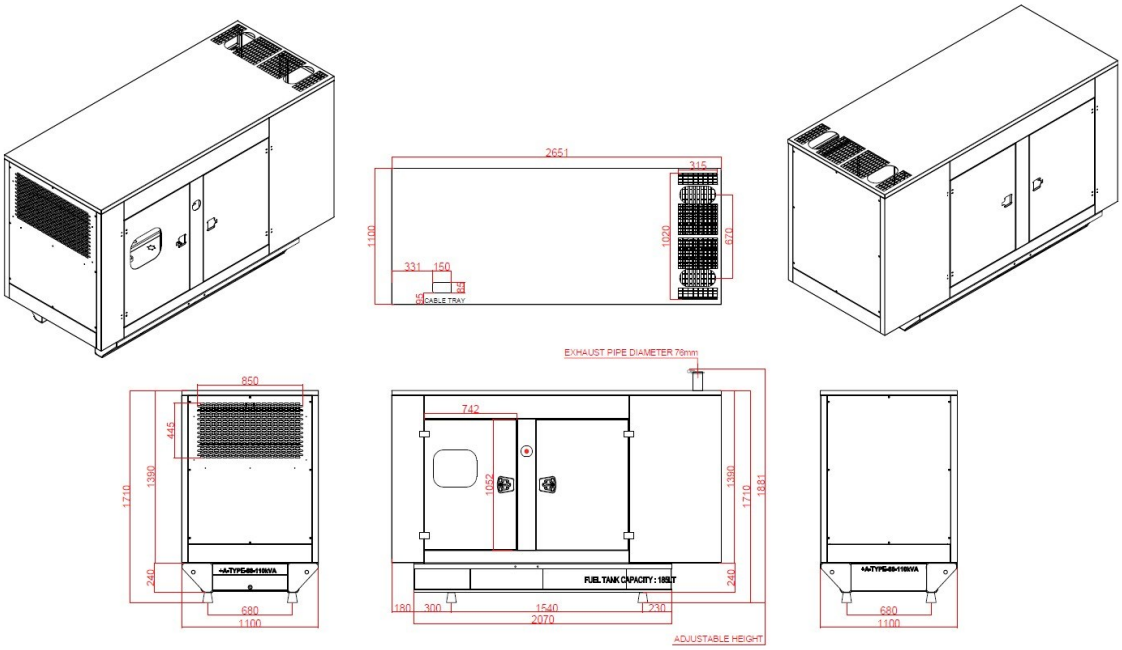

OPEN TYPE DIMENSIONS

Weight	(kg)	1135

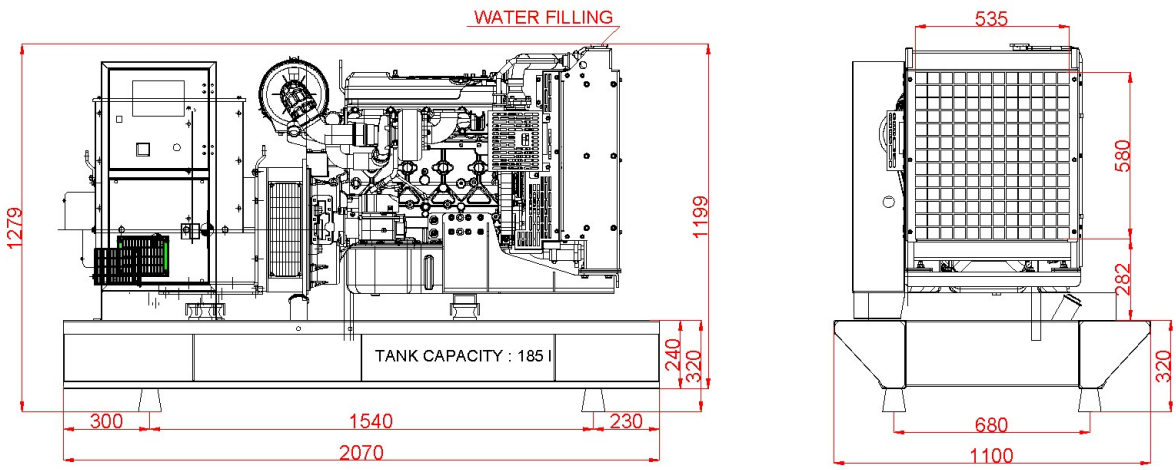

Electrogen GmbH is constantly developing its products and reserves the right to make changes to product configurations without prior notice.